TWIN

CT10224

	OUT
R1	1A 1B
R2	2A 2B
R3	3A 3B
R4	4A 4B
R5	5A 5B

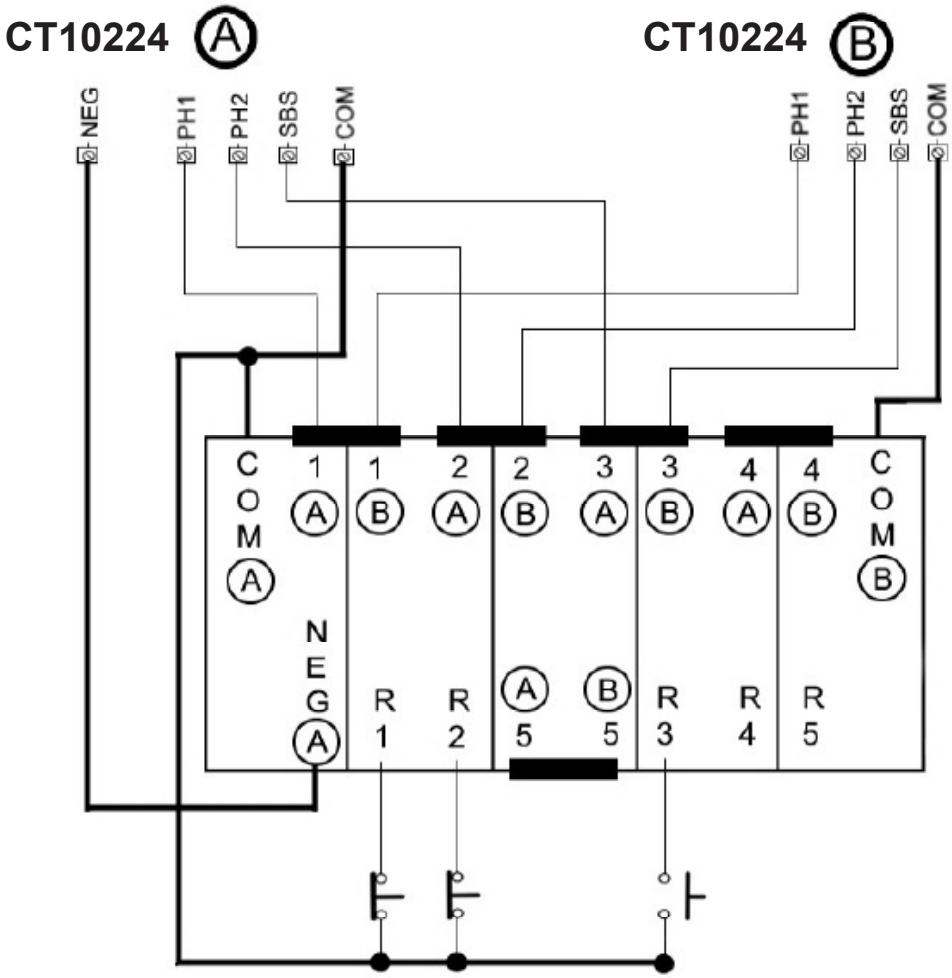

Management System ISO 9001:2008

www.tuv.com ID 9105043769

Instruction version 580TWIN REV.00